PSAG-3101 분해도

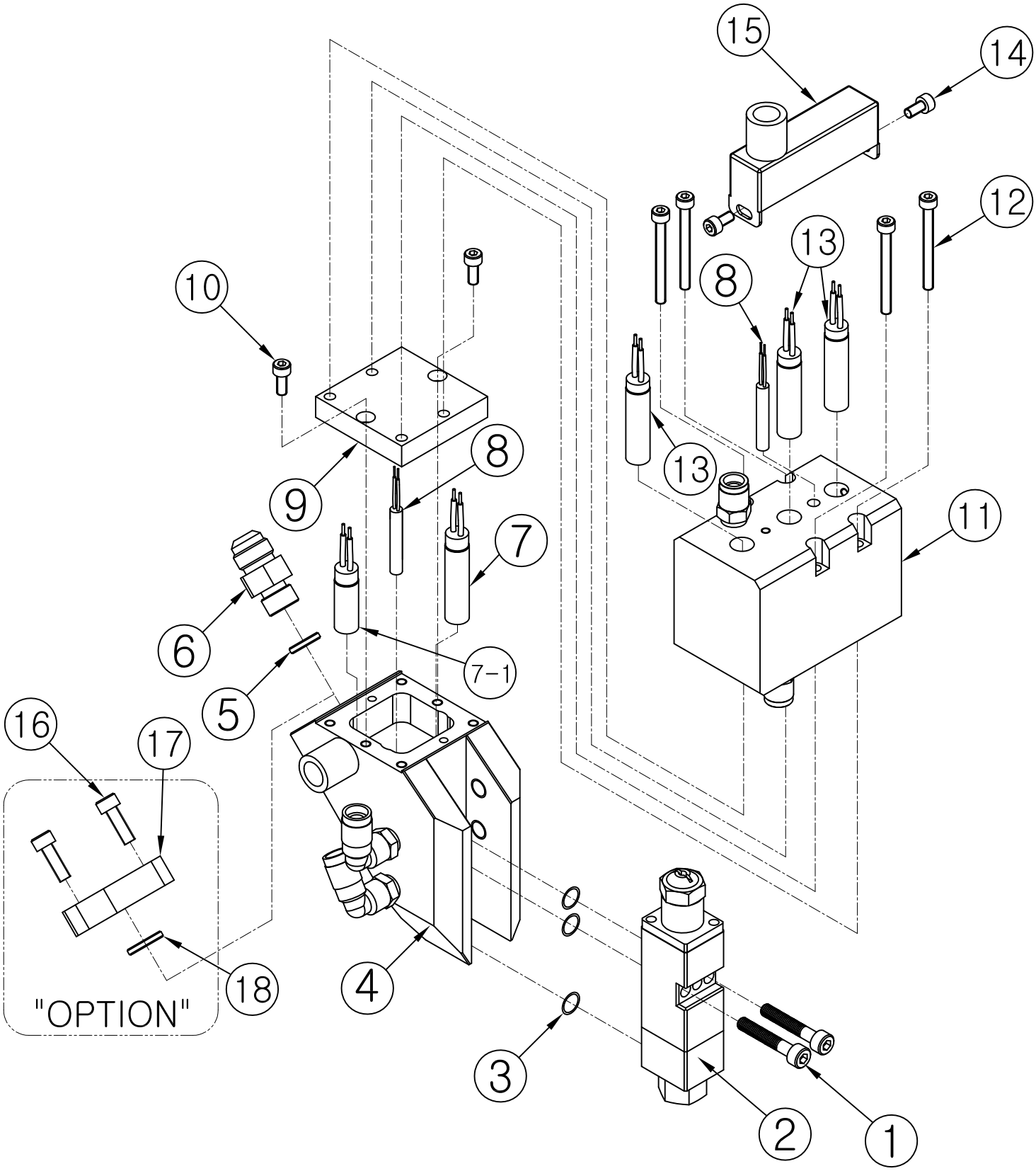

PSAG-3101 분해도

NO	Q'TY	PART / NO	CONTENT / SPEC'
1	2	.	WRENCH BOLT (M5 x 30L)
2	1	.	MODULE
3	3	.	O-RING (AN011)
4	1	.	GUN BLOCK
5	1	.	O-RING (P11)
6	1	.	HOSE NIPPLE
7	1	.	HEATER (3/8" x 240V x 300W x 40L)
7-1	1	.	HEATER (3/8" x 240V x 200W x 30L)
8	2	.	SENSOR (PT TYPE)
9	1	.	GUN COVER
10	2	.	WRENCH BOLT (M4 x 10L)
11	1	.	HOT AIR BLOCK
12	4	.	WRENCH BOLT (M4 x 60L)
13	1	.	HEATER (3/8" x 240V x 200W x 30L)
14	2	.	WRENCH BOLT (M4 x 10L)
15	1	.	WIRE COVER
16	2	.	WRENCH BOLT (M5 x 12L)
17	1	.	NIPPLE PLATE
18	1	.	O-RING (AN018)