720400 DISINTEGRATION AND EXPLAIN

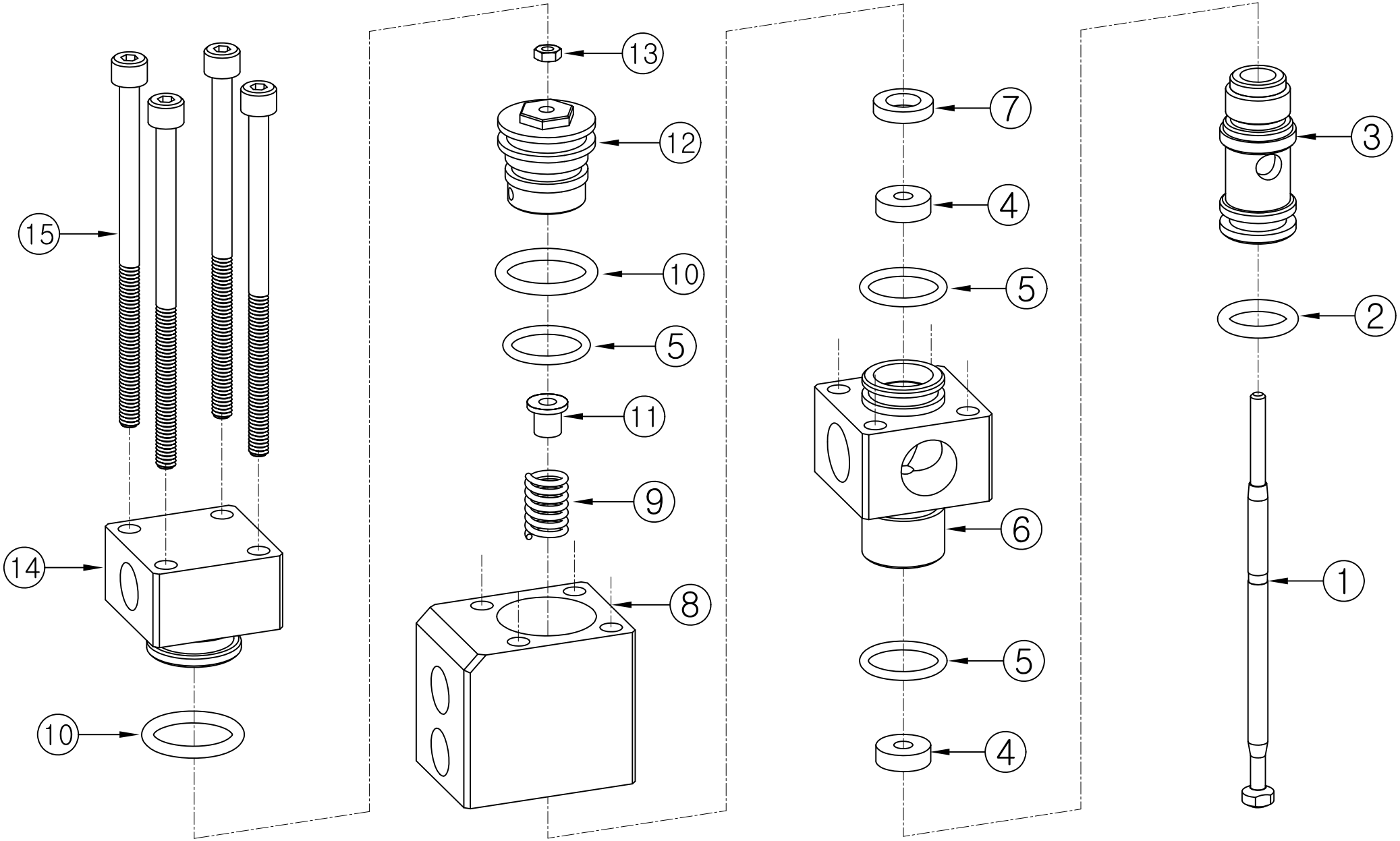

720400 DISINTEGRATION AND EXPLAIN LIST

NO	Q'TY	PART / NO	CONTENT / SPEC'
1	1	720400-1	NIDDLE SHAFT
2	1	511011	O-RING (P11)
3	1	720400-2	SEAT RING
4	2	720400-6	SEAL (Ø3.6 x Ø10 x 3.5t)
5	3	512015	O-RING (AN015)
6	1	720400-3	JOINT BLOCK
7	1	720403-3	SEAL WASHER
8	1	720400-4	BASE BLOCK
9	2	720400-5	SPRING (731400)
10	2	511016	O-RING (P016)
11	1	720400-6	SET RING
12	1	720400-7	PISTON SEAL
13	2	41H03	FIX NUT (M3.0 x P0.5)
14	1	720400-8	CAP BLOCK
15	4	41A04080	WRENCH BOLT (M4 x 80L)